# wurtec

# Master Catalog

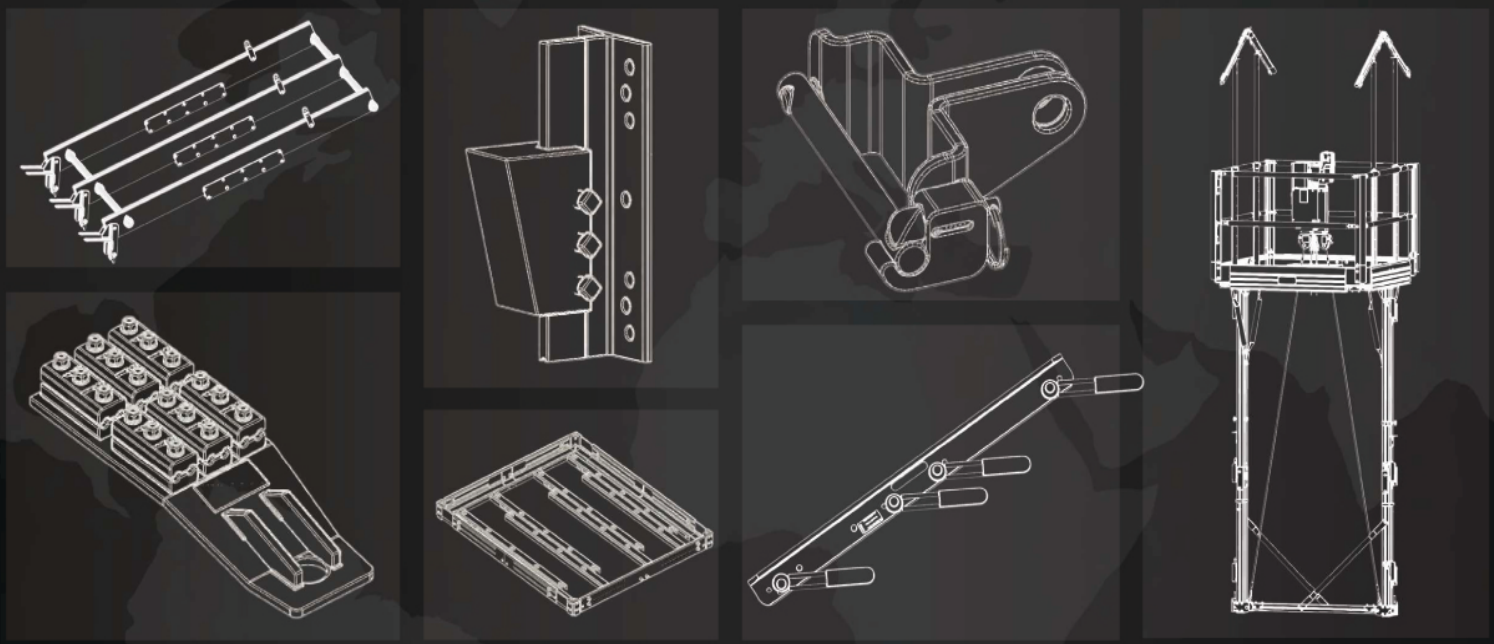

Your global source for vertical transportation tools and components. With thousands of parts in stock at locations around the world, your solution is just steps, a call, or a click away.

## Collaborate • Innovate • Elevate

**Channel Partner :**

YANTRAA tech

www.yantraatech.in



## OMEGA RAIL LIFTER

For efficient stacking of omega rails. Install the splice plate at the top of the rail to be stacked. Install the omega rail lifter on the rail and begin to raise it, allowing it to slide up the rail until it engages the splice plate at the top. Then, pick and stack the rail. When the rail has been hoisted into position and securely fastened, lower the lifter until it reaches a comfortable height and then remove it from the rail.

**#11-297 - 500-lb Capacity**

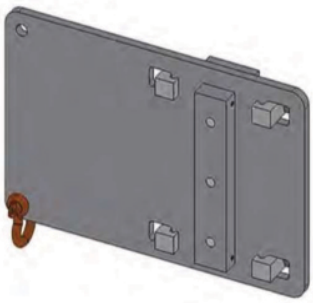

## OMEGA HOIST RIG

Provides a safe hoisting point by clamping onto an omega rail via (4) gripper blocks engaged by (2) 5/8-11 x 7" hex bolts. Anchor shackle attached to hoisting plate provides hoisting point.

**#70-180**



## OMEGA RAIL SPREADER

Insert the rail spreader into the back of an Omega rail and rotate the bolt. The cam action of the spreader will spread the rail, allowing you to easily install the splice tube.

**#11-280**



## HAT RAIL HOIST BRACKET

Allows you to hoist directly from roll-formed "hat"-shaped rails. Position at the desired location, aligning with holes provided in the rail. Pin in place with the special pin provided. Lock securely with the cotter pin and you're ready to hoist. Rated at 5000 lbs per bracket or 10000 lbs when used in pairs.

**#11-195**

## FAST-TRACK HOISTING BRACKET

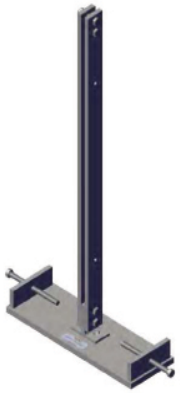

Enables you to hoist your car sling with a cable climber. Bracket is installed in the center of the car and lifts from under your crosshead. Adjustable stops that prevent it from slipping out from under the crosshead channels are provided. Comes complete with both long and short lift arms to allow for differing conditions in the field and will work with most climbers. Capacity is 2500 lbs.

**#11-330**

## PIK A CYCLE

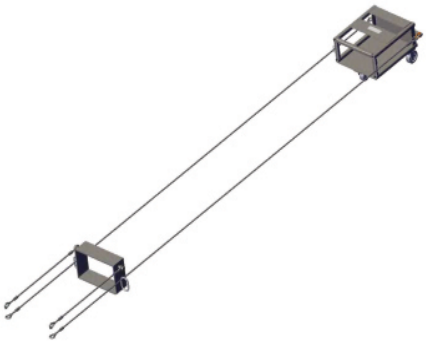

Tool to lift bundles of rails, using a crane, and place them at landing locations for access when stacking.

**#10-10001585**

## T-RAIL LIFTER



Designed for fast, efficient rail hoisting. Allows you to pick up an elevator rail using the fishplate bolted at the top of the rail as an anchor point. Once the rail is lifted and secured into position, the T-Rail Lifter slides back down the rail to the desired location, where it can be easily removed by disengaging the latch and pivoting the back rod.

| Standard T-Rail Lifter | | | |
|---|---|---|---|
| Part No. | Rail Size(s) | Wt./Ft. (lbs) | WLL (lb · kg) |
| 11-284 | T114, T125, T127-1, T127-2 | 12-15 | 600 |
| 11-287 | T70, T75, T82, T89 | 6-8 | 600 |
| 11-289 | T140-3 | 30 | 600 |
| 11-290 | T140-1, T140-2 | 18-22 | 600 |
| 11-294 | T89 | 6-8 | 500 |
| 11-295 | T114, T125,T127-1, T127-2, T140-1 | 12-18 | 500 |
| 11-296 | T140-2, T140-3 | 22-30 | 500 |
| T-Rail Lifter w/ Shackle | | | |
| 11-284-S | T114, T125, T127-1, T127-2 | 12-15 | 600 |
| 11-287-S | T70, T75, T82, T89 | 6-8 | 600 |
| 11-289-S | T140-3 | 30 | 600 |
| 11-290-S | T140-1, T140-2 | 18-22 | 600 |



# V1 FALSE CAR by wurtec

The Wurtec **V1 False Car** is a modular suspended work platform used for the installation of elevator rails and other elevator systems and assemblies. The False Car is powered by a platform-mounted hoist. The platform depth and width are adjustable through various size ranges depending on the model and configuration.

Made of lightweight, high-strength aluminum, the V1 False Car is a convenient solution for safe, efficient installation of hoistway equipment.

## Key Features

- 1500 lbs (680 kg) capacity at 35 ft/min (10.7 m/min)
- Collapsible for easy storage and transport
- (4) separate braking systems when used as a complete system
- Made in the USA of lightweight, high-strength aluminum construction
- Available with canopy for overhead protection
- Thousands in use throughout the global elevator industry

| Version | DBG Range | Rail Sizes | Platform | Canopy | Handrails |
|---|---|---|---|---|---|
| 11-301-INT | 39-65" (1000-1650 mm) | 8-10 mm, 16 mm, 19 mm | 11-305-INT | 11-357-INT | 10-10020230 |
| 11-301-MID | 54-85" (1370-2160 mm) | 5/8", 3/4", 1-1/8", 1-1/4" | 11-305-MID | 11-357, 10-10019359 | 10-10020327 |
| 11-301 | 65-108" (1650-2750 mm) | 5/8", 3/4", 1-1/8", 1-1/4" | 11-305 | 11-357, 10-10019359 | 10-10020036 |

| Load Table | Platform Area | | |
|---|---|---|---|
| Lifting Height | ≤ 2.5 m² · 26.5 ft² | > 2.5 m² · 26.5 ft² ≤ 3.9 m² · 42 ft² | > 3.9 m² · 42 ft² |
| Up to 140 m (460 ft) | 800 lb (363 kg) | 687 lb (312 kg) | 550 lb (250 kg) |
| 140 m (460 ft) to 200 m (655 ft) | 753 lb (342 kg) | 626 lb (284 kg) | 489 lb (222 kg) |
| 200 m (655 ft) to 300 m (990 ft) | 658 lb (294 kg) | 521 lb (236 kg) | 384 lb (174 kg) |

### Beeper Box (#11-301-BP, #11-301-BP-CN)

Plug in between travelling cable and hoist, providing audio and visual signals for a moving False Car to warn people that something is moving in the hoistway.



Versions for North America **(#11-301-BP)** and Asia **(#11-301-BP-CN)**.

| | 11-301-BP | 11-301-BP-CN |
|---|---|---|
| **Voltage (V)** | 220 | 380 |
| **Frequency (Hz)** | 60 | 50 |
| **Phase** | 1 | 3 |
| **For Use In** | North America | Asia |
| **Power Plug** | NEMA L6-20C | IEC 60309 Pin & Sleeve 4P 5W |

### Safety Retraction Kit (#11-310)

Replacement kit for safety retraction mechanism.

### V1 False Car Toolkit (#11-301-TOOLKIT, #11-301-INT-TOOLKIT)

Contains all tools necessary to install the V1 False Car in the hoistway, including:

- Shims
- Drive ratchet w/ sockets
- Long pattern wrenches
- Ratcheting wrenches
- Tape measure
- Needle-nose pliers
- Cutting pliers
- Cinch-strap tie-down
- Carrying bag

### Hardware Kit (#11-301-HDW)

Complete hardware kit for V1 False Car. Call Wurtec representative for details.

### False Car Safety Checklist (#11-301-CKLIST)

Allows you to verify daily safety checks are being performed and log critical information from the time of install. Made of plastic; write on with a grease pencil and erase as needed.

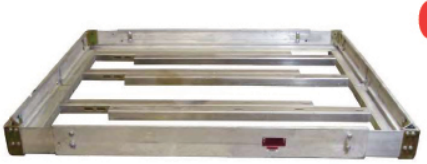

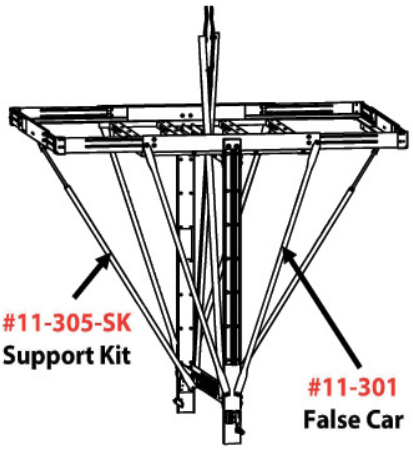


## ADJUSTABLE PLATFORM

Load-rated, patented aluminum platform ideal for use with the Wurtec False Car. Adjustable for the same DBG and depth range as the False Car. Changing configurations and size is quick and easy. Once size is configured, a piece of plywood is used as the floor of the platform and secured under cleats along the inside edge. Platform has 4" (100mm) kick plate around perimeter designed to accept Wurtec's canopies and handrails. Custom sizes also available.

| | | Configuration 1 | Configuration 2 |
|---|---|---|---|
| 11-305-INT<br>Weight: 81 lb (36 kg) | Width (DBG) | 47-65" | 40-62" |
| | Depth | 39-58" | 46.5-65" |
| 11-305-MID<br>Weight: 128 lb (58 kg) | Width (DBG) | 66-92" | 57.25-76" |
| | Depth | 50.5-72" | 66-87" |
| 11-305<br>Weight: 147 lb (66 kg) | Width (DBG) | 72-108" | 63.5-92" |
| | Depth | 61-92" | 76-108" |

#11-305-HP
Handrail Posts

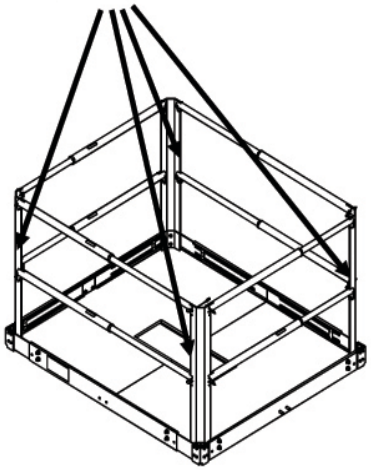

#10-10020036
Handrails

#10-10019359
Canopy

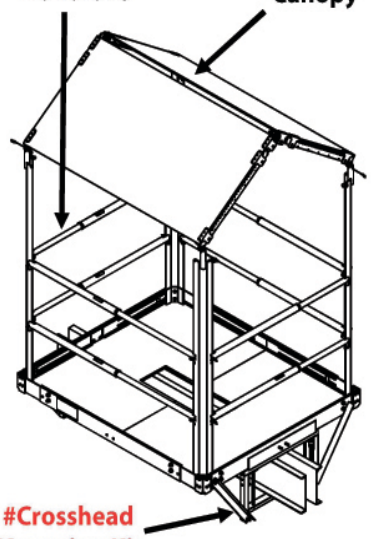

#Crosshead
Mounting Kit
11-305-MK

## ACCESSORIES

**Support Kit (#11-305-SK)**
For added support when expanding platform beyond 7 ft (84") in depth direction. Replaces standard joist bracket that comes with False Car; attaches to bottom flange of platform.

**Handrail Post Kit (#11-305-HP)**
Lets you install a Telescoping Handrail Kit without installing a canopy. Attaches directly to corner brackets on inside of platform.

**Crosshead Mounting Kit (#11-305-MK)**
Securely attaches platform to crosshead of car sling. Accommodates crossheads up to 12" H x 18" W. Custom sizes available.

**Fast Track Hoisting Bracket (#11-330, #11-330-A, #11-330-B**
2500-lb capacity bracket for hoisting your car sling with a cable climber. Installed in the center of the car and lifts from under your crosshead. Adjustable stops prevent it from slipping out from under crosshead channels. Comes complete with long hoist bar.

*For details on canopy and handrail options, see pg. 80.*

| Accessories Compatibility Chart | | | | |
|---|---|---|---|---|
| Desc. | Part No. | 11-305 | 11-305-MID | 11-305-INT |
| False Car | 11-301 | x | | |
| | 11-301-MID | | x | |
| | 11-301-INT | | | x |
| Canopy | 10-10019359 | x | x | |
| | 11-357 | x | x | |
| | 11-357-INT | | | x |
| Handrails | 10-10020320 | | | x |
| | 10-10020327 | | x | |
| | 10-10020036 | x | | |
| Handrail Post Kit | 11-305-HP | x | x | x |
| Support Kit | 11-305-SK | x | x | |
| Crosshead Mounting Kit | 11-305-MK | x | x | |

# CANOPY & HANDRAIL OPTIONS FOR V1 FALSE CAR & ADJUSTABLE PLATFORM

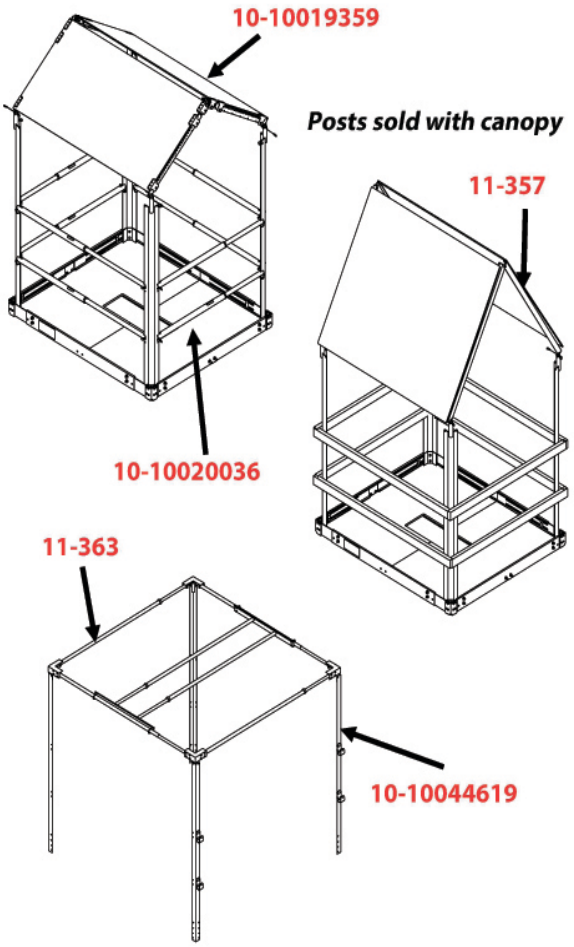


| Description | Part No. | Compatible w/ |
|---|---|---|
| Mesh Netting Break-Away Canopy | 11-362 | 10-10044619 |
| | 11-363 | 10-10044619 |
| Slant-Top Fixed Canopy | 11-355 | 10-10020327, 10-10020036 |
| Slant-Top Canopy & Handrail Kit | 11-356 | - |
| Slant-Top Break-Away Canopy | 11-357 | 10-10020327, 10-10020036 |
| Slant-Top Break-Away Canopy | 11-357-INT | 10-10020320 |
| | 10-10019359 | 10-100202327, 10-10020036 |
| Telescoping Handrails | 10-10020320 | 11-357-INT |
| Telescoping Handrails | 10-10020327 | 11-357, 10-10019359 |
| | 10-10020036 | 11-357, 10-10019359 |
| | 11-356-HR | - |
| Handrail Post Kit | 11-305-HP | 10-10020320 10-10020327 10-10020036 |

Wurtec's canopies provide overhead protection from falling debris for workers on a platform in the hoistway. All of these canopies (except the **#11-355** Slant-Top Fixed Canopy) are designed to "break away" from the corner posts if worker is secured to a life-line and the platform travels downward unexpectedly. This prevents the worker from being trapped under the canopy.

### Mesh Netting Break-Away Canopy (# 11-362, #11-363, #11-364)

- Adjustable telescopic aluminum frame with safety netting to protect from falling debris.
  - 11-362: 48-72"
  - 11-363: 66-108"
- Includes saddle brackets to mount wooden handrails for fall protection.
- Mounts seamlessly to the Wurtec Adjustable Platform.

### Slant-Top Canopy (#11-355, #11-356, #11-357, #11-357-INT)

- Aluminum angle framed roof.
- Plywood covering (not included) provides overhead protection.
- Includes saddle brackets to mount wooden handrails for fall protection.
- Mounts seamlessly to the Wurtec Adjustable Platform and Telescoping Handrails.

### Telescoping Break-Away Canopy (#10-10019359)

- Adjustable telescopic aluminum posts and roof members.
- Plywood covering (not included) provides overhead protection.
- The roof members can "break away" at the corner posts **OR** at the peak.
- Mounts seamlessly with the Wurtec Adjustable Platform and Telescoping Handrails.

### Telescoping Handrails (#10-10020230, #10-10020327, #10-10020036)

- Adjustable telescopic aluminum handrails provide a lateral barrier for workers on the platform.
- Mounts seamlessly with the Slant-Top Break-Away and Telescoping Break-Away Canopies.



# V2 FALSE CAR by wurtec

The Wurtec **V2 False Car** is a modular suspended work platform used for the installation of elevator rails and other elevator systems and assemblies. The False Car is powered by a platform-mounted hoist. The platform depth and width are adjustable through various size ranges depending on the model and configuration.

Made of lightweight, high-strength aluminum, the V2 False Car is a convenient solution for safe, efficient installation of hoistway equipment.

## Key Features

- 2200-lb (1000-kg) capacity at 35 ft/min (10.7 m/min)
- Designed for use on rails with blade widths from 5/8" (16 mm) to 1-1/4" (32 mm)
- Fully adjustable to a wide range of hoistway sizes
- Quick setup and installation
- Slack rope safety triggers automatically in the event of slack in the hoist rope
- Nylon rail guides ensure no wear on rails
- Rail guide spacing and lightweight design for more precise rail alignment
- Collapsible for easy storage and transport
- **Payloads calculated based on a minimum plywood thickness of 3/4" (19 mm)**

| V2 Frame | Complete Kit* | Platform Area ($m^2$ · $ft^2$) | DBG Range (mm · in) | Depth (mm · in) |
|---|---|---|---|---|
| 11-306-I00 | 11-306-K00 | 1.62-2.84 · 17.4-30.6 | 1150-1702 · 45-67 | 1407-1669 · 55-66 |
| 11-306-I01 | 11-306-K01 | 2.69-7.44 · 29.0-80.1 | 1665-2752 · 66-108 | 1617-2702 · 64-106 |
| 11-306-I02 | 11-306-K02 | 3.79-10.18 · 40.8-109.6 | 1973-3041 · 78-120 | 1922-3346 · 76-132 |
| *Includes platform, handrail, canopy, and fall protection | | | | |

| Working Load Limits | Platform Area | | |
|---|---|---|---|
| **Lifting Height** | **≤ 2.6 $m^2$ (28 $ft^2$)** | **> 2.6 $m^2$ (28 $ft^2$) ≤ 6.8 $m^2$ (73 $ft^2$)** | **> 6.8 $m^2$ (73 $ft^2$)** |
| Up to 140 m (460 ft) | 1255 lbs · 571 kg | 1059 lbs · 482 kg | 921 lbs · 420 kg |
| 140 m (460 ft) to 200 m (655 ft) | 1179 lbs · 537 kg | 983 lbs · 448 kg | 845 lbs · 385 kg |
| 200 m (655 ft) to 300 m (990 ft) | 1047 lbs · 477 kg | 851 lbs · 388 kg | 713 lbs · 326 kg |

### Adjustable Platform
### #11-307-I00, #11-307-I01, #11-307-I02

Load-rated platform for use with the V2 False Car. Plywood not included; should be at least 3/4" thick.

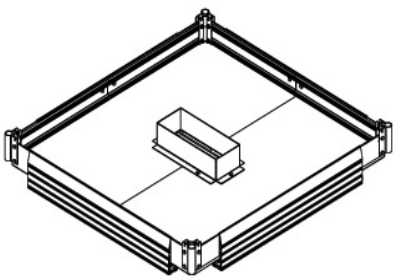

### Handrail Kit
### #11-308-I00, #11-308-I01, #11-308-I02

Provides a lateral barrier for workers on the platform.

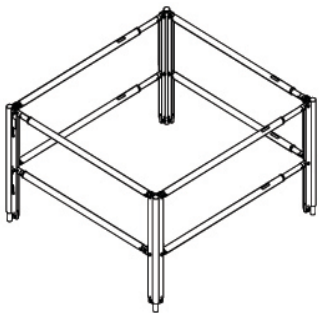

### Telescoping Break-Away Canopy (#10-10019801, #10-10019833)

Telescoping aluminum posts and roof members provide an adjustable framework for a plywood canopy to protect workers from falling debris. Roof members "break away" at the posts or peak when the worker is secured to a lifeline and the platform travels downward unexpectedly. Plywood not included; should be at least 3/8" thick.

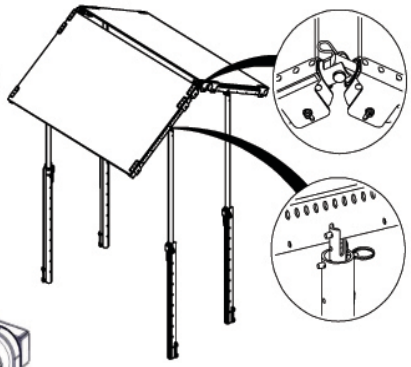

### Fall Protection Assembly (#11-312-I01)

A bracket which can be mounted to the inside of the V2 False Car platform and used as a fall protection anchor point.

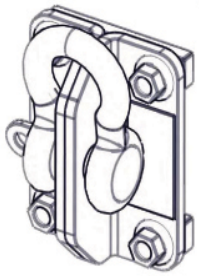

### Beeper Box (#11-301-BP-CN, #11-301-BP-2200)

The Beeper Boxes plug in between the travelling cable and hoist, providing audio and visual signals for a moving False Car to warn people that something is moving in the hoistway. There are versions for North America (**#11-301-BP-2200**) and Asia (**#11-301-BP-CN**).



| | 11-301-BP-2200 | 11-301-BP-CN |
|---|---|---|
| **Voltage (V)** | 240 | 380 |
| **Frequency (Hz)** | 60 | 50 |
| **Phase** | 3 | 3 |
| **For Use In** | North America | Asia |
| **Power Plug** | NEMA L15-20 3P 4W | IEC 60309 Pin & Sleeve 4P 5W |

### Gate Switch (#10-10013449)

A switch that can be mounted to the handrail strike post and wired into the hoist safety circuit, preventing the False Car from moving if the handrail gate is not securely locked.

### V2 False Car Toolkit (#11-306-TOOLKIT)

Contains all the tools necessary to install the V2 False Car in the hoistway. It includes:

- Metric hex keys - 2.5 mm, 3 mm, 4 mm, 5 mm, 6 mm, 8 mm
- Long pattern combination wrenches - 10 mm, 13 mm, 15 mm, 19 mm, 27 mm
- 19-mm combination ratcheting wrench
- #2 Philips screwdriver
- Ball peen hammer
- 7-1/2" needle nose pliers
- Flat blade screwdriver

### Trip Bar Assembly (#10-10013271)

Safety mechanism for the V2 False Car that is activated if the bottom of the platform makes contact with an object in the hoistway.

## COST/BENEFIT ANALYSIS**

**Estimated times based on internal testing and customer input.

| | Build/Install Time | Removal Time | Total Time (hrs) |
|---|---|---|---|
| **Scaffolding** | 48 hr | 48 hrs | 96 hrs |
| **Fast Track Method (V1 Platform, Mounting Kit, & Hoist Bar)** | 3 hrs 15 mins* | 1 hr 45 mins | 5 hrs 15 mins |
| **V1 False Car** | 16 hrs | 8 hrs | 24 hrs |
| **V2 False Car** | 16 hrs | 8 hrs | 24 hrs |
| * 30 minutes to mount crosshead kit, up to 2 hours to install platform, and up to 1 hour to install hoist | | | |

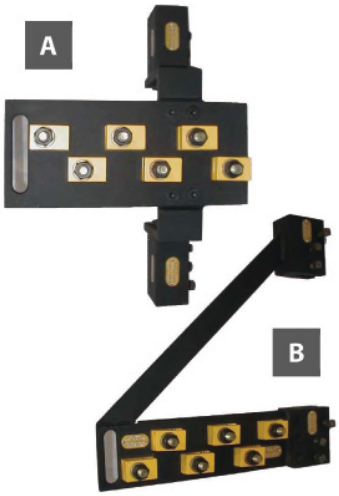


**Pictured with clips.**
**Clips sold separately.**



#60-800-04




**Pictured with clips.**
**Clips sold separately.**

## 2:1 ROPE CHANGE-OUT TOOL

Wurtec's **2:1 Rope Change Out Tool** is a USA-made tool that enables you to replace a maximum of 9 wire ropes safely and efficiently. Each kit comes with complete installation instructions to guide you through the process of rope replacement.

### Basic Kit for Use with Up to 6 Ropes:

| Item | Part No. | Description |
|---|---|---|
| A & B | 60-800 | Includes (1) #16-800-01, (1) #16-800-02, & (1) #82660; Designed for 8-lb rails |
| B | 60-800-01 | Live End Cable Support Bracket |
| A | 60-800-02 | Dead End Cable Support Bracket |
| | 60-820 | 2:1 Rope Change Out Tool for 12– to 15-lb Rails |
| | 60-820-01 | Live End Cable Support Bracket for 60-820 |
| | 60-820-02 | Dead End Cable Support Bracket for 60-820 |
| | 82660 | "T" Handle Hex Drive |

### Select Cable Clip Size and Quantity:

| Part No. | Description |
|---|---|
| 60-800-03 | 5/16" (8-mm) Cable Clip Assembly |
| 60-800-04 | 3/8" (10-mm) Cable Clip Assembly |
| 60-800-05 | 7/16" (11-mm) Cable Clip Assembly |
| 60-800-06 | 1/2" (13-mm) Cable Clip Assembly |
| 60-800-08 | 9/16" (14-mm) Cable Clip Assembly |
| 60-800-09 | 5/8" (16-mm) Cable Clip Assembly |
| 60-800-10 | 11/16" Cable Clip Assembly |
| 60-800-11 | 3/4" (19-mm) Cable Clip Assembly |

### Extension Kit for Use with 7-9 Ropes

| Item | Part No. | Description |
|---|---|---|
| F & G | 60-810 | Includes (1) 16-800-06 & (1) 16-800-07 |
| F | 60-810-01 | Live End Extension Bracket |
| G | 60-810-02 | Dead End Extension Bracket |

Specify cable size for 2:1 rope change-outs up to (6) wire ropes. You must add extension brackets for all change outs from 7-9 ropes.

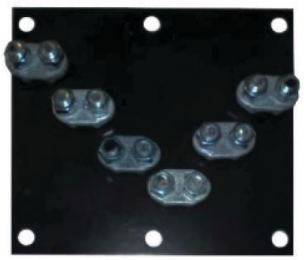

## CABLE CONTROLLING BRACKET

Allows you to maintain control of up to (6) wire ropes during roping or re-roping.

**#16-290 - 1/2" Rope**
**#16-291 - 5/8" Rope**
**#16-292 - 3/8" Rope**

## CABLE SLED FRAME



The foundation of the Cable Sled System. Used to mount specific plates and/or shortening clamps in various arrangements to adapt the sled for low- or high-rise installations. Significantly reduces installation time by pulling in 6-8 ropes at once. This method maintains control over ropes by preventing twisting, torquing, or cross-overs and can reduce sheave wear and significantly improve rope life and system performance.

**#16-296**

## LOW-RISE PLATE



For use in the Cable Sled System. This lighter-duty plate facilitates clamp arrangement for low-rise installations.

**#16-296-050 - (8) 1/2" Clamps**
**#16-296-054 - (6) 3/8" Clamps**

## ROEBLING CLAMP



Each clamp securely grabs two ropes. Ropes resist slipping through the clamp because of the spiral ridges cast into the grooves. Includes hardware shown. 600 lbs maximum safe working load per rope.

| Part No. | Size (in) | Size (mm) | Torque Requirement (ft·lb) |
|---|---|---|---|
| 16-050 | 1/2 | 12-13 | 50 |
| 16-051 | 5/8-11/16 | 15-17 | 50 |
| 16-052 | 7/16 | 11 | 80 |
| 16-053 | 7/8 | 22 | 80 |
| 16-054 | 3/8 | 9-10 | 80 |
| 16-055 | 1/2-9/16 | 12-14 | 80 |
| 16-056 | 5/16 | 7-8 | 80 |
| 16-057 | 3/4 | 18-20 | 80 |
| 16-058 | 5/8-11/16 | 15-17 | 80 |

## SHORTENING CLAMP



Allows you to lift the elevator car by clamping onto hoist ropes directly above the hitch plate. Once it is in place, a hoist can be attached between it and the crosshead. Slack can then be created in the hoist ropes, allowing easy shortening of the rope at the hitch plate. Each rope is gripped with (2) cast clamps, which have spiral edges in one groove.

| Part No. | No. of Ropes | Rope Size (in) | Rope Size (mm) | Capacity (lbs) |
|---|---|---|---|---|
| 16-278 | 6 | 3/4 | 18-20 | 8000 · 3628 |
| 16-279 | 6 | 5/16 | 7-8 | 8000 · 3628 |
| 16-280 | 6 | 1/2 | 12-14 | 8000 · 3628 |
| 16-281 | 6 | 5/8-11/16 | 15-17 | 8000 · 3628 |
| 16-282 | 6 | 7/16 | 11 | 8000 · 3628 |
| 16-283 | 6 | 3/8 | 9-10 | 8000 · 3628 |
| 16-284 | 8 | 5/16 | 7-8 | 10000 · 4535 |

| Part No. | No. of Ropes | Rope Size (in) | Rope Size (mm) | Capacity (lbs) |
|---|---|---|---|---|
| 16-285 | 8 | 1/2-9/16 | 12-14 | 10000 · 4535 |
| 16-286 | 8 | 5/8-11/16 | 15-17 | 10000 · 4535 |
| 16-287 | 8 | 7/16 | 11 | 10000 · 4535 |
| 16-288 | 8 | 3/8 | 9-10 | 10000 · 4535 |
| 16-289 | 8 | 3/4 | 18-20 | 10000 · 4535 |
| 16-298 | 10 | 3/8 | 9-10 | 10000 · 4535 |

*Roebling clamps not interchangeable due to hole spacing.



## WORK DECK

Provides a safe, sturdy work platform when unfolded and supported between the landing sill and back wall of the hoistway. Folds into a small envelope for shipping, handling, and hoisting.

Currently configured for hoistways between 69" and 96" deep, it can be easily modified to fit nearly any hoistway size or configuration. Standard platform size is 45" wide x 60" long with the deck constructed of non-slip aluminum planks. Openings in the platform floor can be created by cutting sections out of the floor planks and restacking them into the tracks provided. The tracks, along with a clamping mechanism, hold the planks securely in place.

Accessed by climbing approximately 4' up a ladder. Protected with a handrail system complete with kick plates. The entire Work Deck weighs only about 200 lbs, has a capacity of 600 lbs, and can be easily modified to suit special job conditions.

**#11-340**

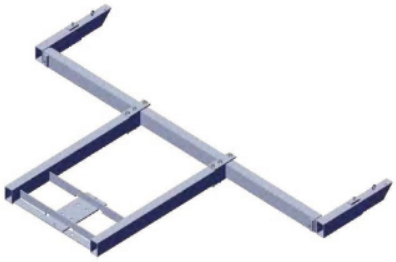

## PLUMB LINE DROP TOOL

Lightweight aluminum tool that attaches to the landing to extend plumb lines into the hoistway. Adjustable to predetermined DBG locations. For DBGs of 72"-100". Custom sizes available.

**#10-121**



**#10-185**



**#10-185-01**

## TARGET BOARD TEMPLATE, DUAL-LINE

Use this adjustable aluminum target board assembly to set and square DBG fast and easily. Target board helps you drop and position (4) target lines, (2) for each rail. Lines are dropped on 14" centers and are compatible with the Dual-Line Ratchet Brackets.

**#10-185 - Target Board Template**
**#10-185-01 - Replacement Arms**



## RAIL ALIGNMENT STARTER KIT

Complete set of tools for rail alignment. Designed for use with 8-lb, 12-lb, 15-lb, and 18.5-lb rails. Includes:

(1) #13-100 Music Wire (12-gauge)
(4) #10-150 Plumb Line Clamp Combo
(2) #10-195 Ratchet Tensioner
(1) #10-100 Regular Rail Pointer Set
(1) #10-200 Plumb Line Gauge Combo

**#10-205 - Starter Kit**
**#10-205-U - Universal Kit; Substitutes 10-150-U & 10-200-U**

## PLUMB LINE CLAMP

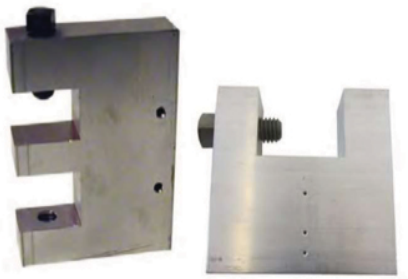

Accurately secures the plumb line 1/2" (12.7 mm) or 1" (25.4 mm) from the center of the rail face. Made of high-strength, lightweight aluminum. Designed for 5/8" and 3/4" rail faces.

#10-150 - **Combo 5/8" & 3/4" Rail Faces; Fits 8-, 12-, 15-, & 18-lb. Rails**
#10-152 - **Combo 5/8" & 3/4" Rail Faces (Used w/ False Car)**
#10-160 - **1-1/8" Rail Face; Fits 22-lb Rail**
#10-170 - **1-1/4" Rail Face; Fits 30-lb Rail**

## INTERMEDIATE PLUMB LINE CLAMP

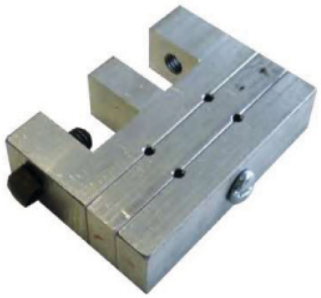

Accurately secures the plumb line 1/2" and 1" from the center of the rail face. Loosen the screw, slip the line into the proper hole, tighten, and mount to the aligned rail.

#10-151 - **Combo 5/8" & 3/4" Rail Faces**
#10-153 - **Combo 5/8" & 3/4" Rail Faces (Used w/ False Car)**
#10-154 - **Combo 1-1/8" & 1-1/4" Rail Faces**
#10-155 - **Combo 1-1/8" & 1-1/4" Rail Faces (Used w/ False Car)**

## ADJUSTABLE PLUMB LINE CLAMP



Works with the Realignment Pointer Set (**#10-110**), allowing you to drop your plumb line to the sides of the rail and clear of the car.

#10-180

## UNIVERSAL PLUMB LINE CLAMP

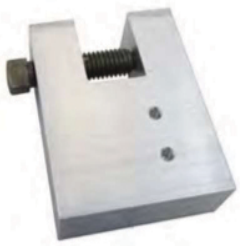

Attaches plumb lines to rails up to 5/8" thick. Used with the Universal Plumb Line Gauge (**#10-200-U**).

#10-150-U - **Up to 5/8" Rail Face**

## PLUMB LINE TENSIONER



This lightweight and compact tool easily maintains line tension up to the breaking point. Easily installs over plumb line clamps **#10-150**, **#10-160**, and **#10-170**. Plated for long life against the elements.

## PLUMB LINE RATCHET TENSIONER



Designed to be used directly below a Wurtec Plumb Line Clamp on 5/8" and 3/4" rails. Simply tighten the clamp onto the rail face, feed the plumb line through the slotted cylinder, and tighten to the desired tension. Lightweight aluminum with a plated steel ratchet for durability.

#10-195 - **5/8" & 3/4"**
#10-196 - **1-1/8" & 1-1/4"**

## RATCHET BRACKET, DUAL LINE, 5/8" & 3/4"



Use to easily position and tension (2) separate target lines. The lines are located 1/4" behind the back of the rail and 14" apart. The bracket bolts to the back of the rail or to the pit channel using rail clips and standard hardware (included).

**#10-182 - 5/8" & 3/4"**

## MUSIC WIRE



Available in 1/4, 1, 3, and 5-lb packages.

| Part No. | Gauge | Approx. Length (ft) | Diameter (in) | Ultimate Breaking Strength (lbs) | Size |
|---|---|---|---|---|---|
| 13-100 | 12 | 440 | 0.029 | 200 | 1-lb coil |
| 13-110 | 12 | 1320 | 0.029 | 200 | 3-lb spool |
| 13-120 | 12 | 2200 | 0.029 | 200 | 5-lb spool |
| 13-140 | 10 | 162 | 0.024 | 136 | 1/4-lb coil |
| 13-141 | 10 | 650 | 0.024 | 136 | 1-lb coil |

## PLUMB LINE GAUGE

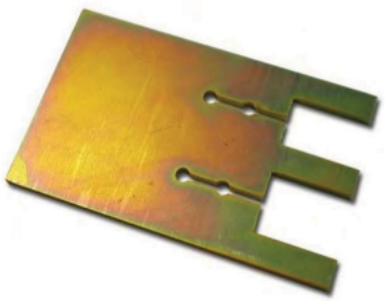

Readily indicates rail placement and alignment relative to a plumb line 1/2", 1", or 1-1/4" off the rail face. Made of 1/8" thick-plated steel.

**#10-200 - Combo 5/8" & 3/4" Rail Faces; Fits 8, 12, 15, & 18.5-lb**
**#10-210 - Combo (F&R) 5/8" & 3/4" Rail Faces; Fits 8, 12, 15, & 18.5-lb**
**#10-211 - Combo (F&R) 5/8" & 3/4" Rail Faces (Used w/ False Car); Fits 8-, 12-, 15-, & 18.5-lb Rails**
**#10-213 - Combo (F&R) 1-1/8" & 1-1/4"**
**#10-220 - 1-1/8" Rail Faces; Fits 22-lb Rail**
**#10-230 - 1-1/4" Rail Faces; Fits 30-lb Rail**

## UNIVERSAL PLUMB LINE GAUGE



Readily indicates rail placement and alignment relative to a plumb line on rails up to 5/8" thick.

**#10-200-U - Up to 5/8" Rail Faces**

## SILL & HEADER GAUGE



Quickly and accurately set running clearance for the landing sill and the header using this gauge and the sill on your running platform.

**#11-285**

## ALIGNMENT GAUGE, COUNTERWEIGHT OMEGA RAIL



Use these aluminum gauges to quickly and accurately set your counterweight rails. Set them in the correct position off your main rails and they will identify the exact location of your counterweight rails.

**#10-112**

## ALIGNMENT GAUGE, COUNTERWEIGHT T-RAIL



Use these aluminum gauges to quickly and accurately set your counterweight rails. Set them in the correct position off your main rails; they will identify the exact location of your counterweight rails.

#10-113

## MAIN RAIL ALIGNMENT GAUGE



Aligns rails up to 1-1/4" face width. Add a piece of unistrut from the jobsite and adjust to any DBG. Features weld slag proof C-clamps on each end, attachment holes for customer supplied unistrut, adjustable templates for piano wire locators, and bubble level on each end.

#10-129

## CWT RAIL ALIGNMENT GAUGE



Aligns CWT rail brackets by referencing the backs of the main rails.

#10-123

## RAIL ALIGNMENT GAUGE, DUAL LINE

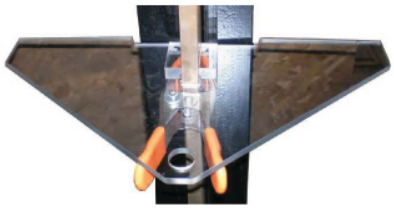

Use this tool to align your rails to the target lines dropped using the dual line ratchet bracket. The see-through gauge allows easy viewing of the line and comes with a spring action clamp so the bracket can be secured to the rail allowing for hands-free adjusting.

**#10-117 - 5/8" Gauge**
**#10-118 - 3/4" Gauge**
**#10-119W - 1-1/8" Gauge**
**#10-120 - 1-1/4" Gauge**

## RAIL STRAIGHTNESS TESTER

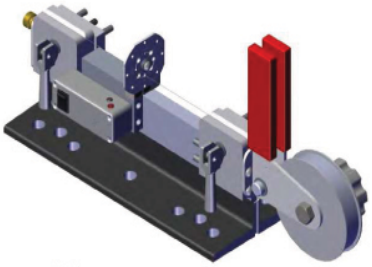

Quick, accurate method for measuring elevator guide rail straightness. Comes in compact portable case and is composed of (3) sections: (2) rail end clamps (one with the wire spool assembly, which should contain approximately 100'of Ø.015 steel wire) and (1) sensor block.

#30-10001669

## JOINT ALIGNMENT TOOL



Allows you to clamp your rails into the correct position at the rail joint using the cam handles provided. Once the fish plate is tightened, the tool is removed, leaving you with a smooth and proper rail joint. Saves time and improves quality of rail joints. Works on all rail faces 3/8" to 1-1/4" thick. Made primarily of aluminum.

#10-740

## OMEGA RAIL SPREADER



Insert the rail spreader into the back of an omega rail and rotate the bolt. The cam action of the spreader spreads the rail, allowing you to easily install the splice tube.

#11-280



## RAIL POINTER SET

For accurate alignment of rails. Set comes complete as shown and is ready to be fastened to 3/4" EMT conduit (not included) using the included U-bolts. Set is made from lightweight aluminum for easy handling. Adjustable gauge made from stainless steel for durability.

#10-100



## RAIL POINTER SET, HEAVY-DUTY

Built from heavy-duty aluminum for durability. Clamping blocks fit 1" EMT conduit (not included). Gauges fastened to conduit establishing DBGs. As you move through hoistway, DBG can be set at same time rail faces are set in correct relationship to each other. Longer pointer is mounted on ball bearing with easily adjustable alignment gauge.

#10-105



## RAIL POINTER SET, RE-ALIGNMENT

Designed to be used when the car is in the hoistway. The conduit is offset 8" (203.2mm) from the rail centerline, allowing it to clear the ropes. The plumb line gauges are built-in and adjustable, to work with our adjustable plumb line clamp, **#10-180**.

#10-110



## SHIM FOR 5/8" HARDWARE

Universal shims 3" x 9". Slotted for ease of installation. Fits 5/8"-dia. bolt patterns with 3-1/2" x 6-1/2" centers. Won't fall out if hardware loosens.

**#10-125 - 1/64" Thick (200 Package)**
**#10-126 - 1/32" Thick (100 Package)**
**#10-127 - 1/16" Thick (50 Package)**
**#10-128 - 1/8" Thick (25 Package)**

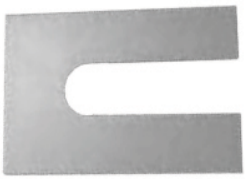

## SINGLE-SLOT SHIM

1/16"-thick shim measuring 2-1/2" wide by 4" long. Comes with a 13/16" slot. Universal shim usable in a wide variety of applications.

**#10-130 - 1/16"**
**#10-131 - 1/8"**



## COMPLETE DOUBLE-BEAM SYSTEM FOR T-RAIL

Complete laser kit for T-rail and omega rail alignment. All brackets required to mount the laser are provided, along with the necessary targets. Includes:

(2) Klein lasers
(2) laser shims
(2) laser mounting brackets, rnd.
(2) laser mounting brackets, 5/8"
(2) rail clamps, laser, 5/8"
(4) target plugs, laser, bull's-eye
(2) target plugs, laser concentrator
(1) black case w/ foam

#10-124-SBL2



## OMEGA RAIL ALIGN GAUGE BUTTON

Fits into the wide variety of brackets and gauges that are used to position and align omega rails. Made of steel and designed for use with the industry standard piano wire.

#10-119

# wurtec

Your global source for vertical transportation tools and components. With thousands of parts in stock at locations around the world, your solution is just steps, a call, or a click away.

Collaborate • Innovate • Elevate

**Channel Partner :**

YANTRAA tech

www.yantraatech.in

Mob. : 96730 04188
Email : sales@yantraatech.in
Website : www.yantraatech.in
Factory : Gat No. 255/A, Jyotiba Nagar,
Talawade, Pune - 411 062. India.

**Tel**. : 020-24263267 , **Email** : sales@yantraatech.in
**Factory** : Gat No. 255/A, Jyotiba Nagar, Talawade, Pune - 411 062. India.